SPECIFICATION SHEET

February 2005

408

Tamper Evident
CONTAINER # 63354 / LID # 63353

TECHNICAL DATA

Capacity under lid:
4.04 L / 1.06 US gal.

Wall thickness:
Container: 0.14 cm (0.054 in.)
Lid: 0.147cm (0.058 in.)

Weight (approx.)
Container: 171 g (6.03 oz.)
Lid: 109 g (3.84 oz.)

Material:
Cont .: PP
Lid: HDPE

Thermal range:
0°C (32°F) to 82° C (180°F)

Standard color : Natural
Other colors upon request

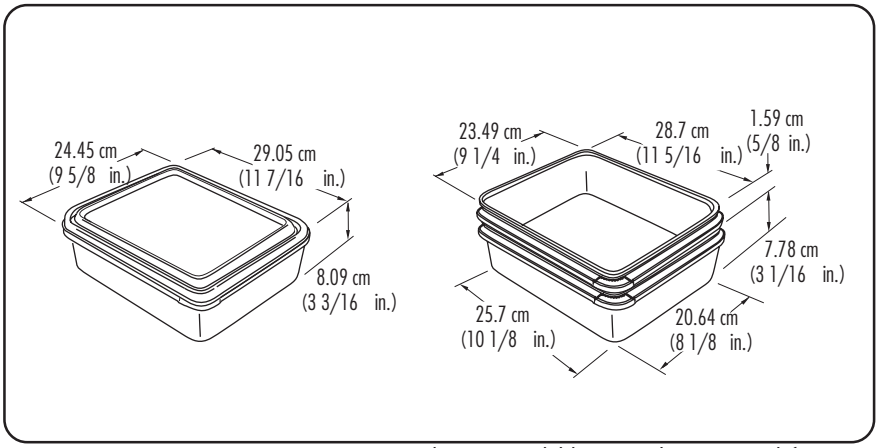

(Materials are recyclable or can be recovered for energy)

TOP LOADING RESISTANCE

55 kg (121 lb.) at 23 C [73 F].
Product temperature when filling containers and warehouse temperature will affect container performance.
IPL recommends to make necessary testing prior to full production.

PRINTING UP TO 4 COLORS, DRY OFFSET

LID ONLY

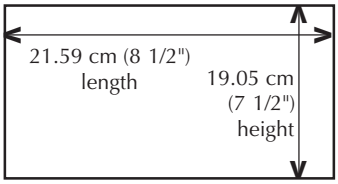

PALLETIZATION OF FILLED CONTAINERS

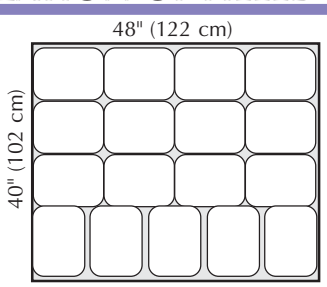

17 containers per layer

Stacked container recommendation:
4 high / pallet

OPENING AND CLOSING

TO OPEN: Break the Tamper-Evident tab, then remove lid.

TO CLOSE: Align lid on container, then press all the way around.

RECOMMENDATIONS

- Do not exceed pallet edges with containers
- Staggered pattern is recommended for greater stability
- Double faced pallets with close together boards on both sides are recommended for best results
- To improve stability, release air from container when putting the lid
- Stretch wrapping machine tension should be adjusted to container
- Use slip-sheet to improve containers stability if necessary

PACKAGING OF EMPTY CONTAINERS/LIDS

WAREHOUSING OF EMPTY CONTAINERS: 1 pallet-3 bundles
No double stacking. Racking recommended.

Approved by:

Approvals: ..... Virgin materials are approved for food contact and meet FDA (Food and Drug Administration USA) and HPB (Health ProtectionBranch Canada) regulations.

Advise: ..... Handling conditions vary a lot from customer to customer, tests are recommended throughout the process of denesting, filling, conveying, palletization, warehousing, transportation and utilization by end users, etc. Specifications can be modified without notice. Please contact your IPL representative to confirm these data.

Quality Assurance: . IPL is ISO 9001 certified and quality procedures are documented in our quality system

USA
IPL PRODUCTS, LTD.
640 Lincoln Street
Worcester, MA 01605
Tel.:(508)351-6050 Fax.:(508)351-6044
Toll free: 1-800-818-1318

Canada
IPL INC.
140 Commerciale
St-Damien, QC
Canada G0R 2Y0
Tel : (418) 789-2880
Fax : (418)789-3153
Toll free: 1-800-463-0270 Ext. 299

Web Site
www.ipl-packaging.com